HISENS

HS-TR520 2700K/4000K

Dimmable Exhibition/Museum lights

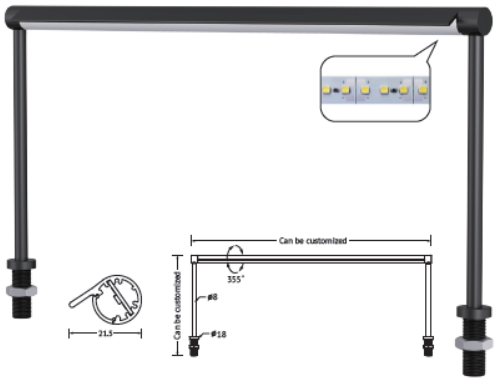

SPECIFICATIONS

Wattage: 16W	Input Voltage: 12V DC
CCT: 2700K / 4000K	IP Rating: IP20
Beam Angle: 120deg	Body Color: Black / Silver / Gold
Mounting Type: Recessed	Brand: Hisens
Warranty: 3 Years	Additional Feature: Sizes can be customized
Body Material: Aluminium	